W01785

All product specifications and certifications are subject to change.

2100 / 1700 WATT RECOIL START
INVERTER PORTABLE GENERATOR WITH ADAPTER AND BUILT-IN PARALLEL KIT
EPA AND cETL CERTIFIED ANSI / PGMA G300-2018 COMPLIANT

FIRMAN POWER EQUIPMENT
8644 W. LUDLOW DR.
PEORIA, AZ 85381
1-844-347-6261
WWW.FIRMANPOWEREQUIPMENT.COM

UPC // 840876117859
STARTING WATTS // 2100
RUNNING WATTS// 1700
VOLTAGE // 120V
FREQUENCY // 60Hz
ENGINE TYPE // OHV
STARTING SYSTEM // RECOIL
FUEL TANK SIZE // 0.9 GAL
RUN-TIME // UP TO 9 HRS (@25% LOAD)
DECIBLES// 54 dB (@7m @25% LOAD)
CARTON L×W×H// 21.7'' × 15.0'' × 18.5''
GROSS WEIGHT// 56.3 LBS.
UNIT WEIGHT// 45.9 LBS.
UNITS PER PALLET// 18 / 12
UNITS PER CONTAINER// 632 / 40HQ
BONUS // TWO PARALLEL CABLES / ADAPTER

CONTROL PANEL
(1) 5-20R 20A-120V
(1) L5-30R 30A-120V TWIST LOCK
(1) L5-30P TO TT-30R 30A-120V ADAPTER
(1) USB OUTLET 2.1A-5V

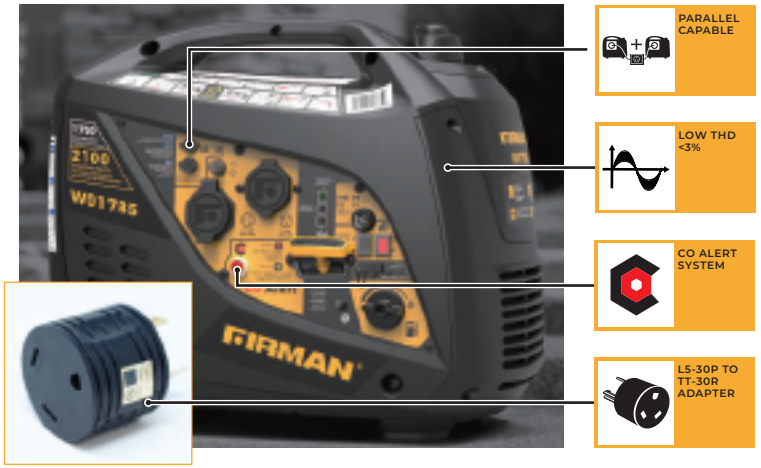

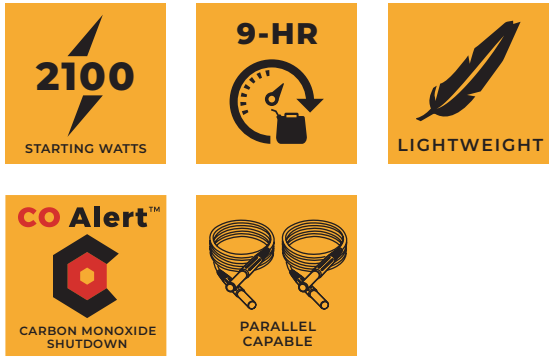

3 YEAR WARRANTY

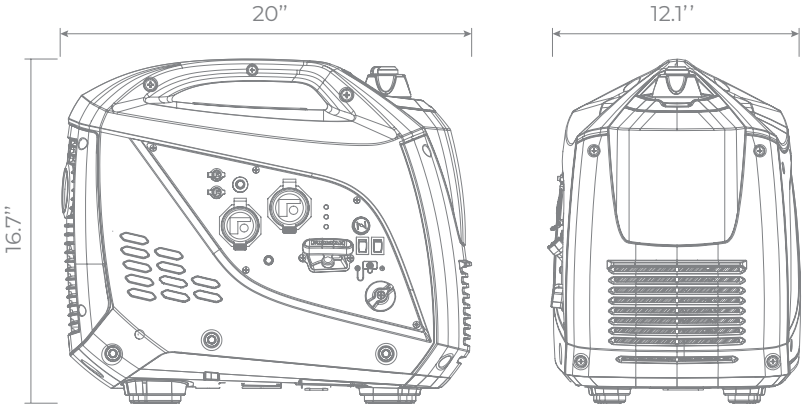

BEST USED FOR

1700
RUNNING WATTS
2100
STARTING WATTS
W01785
CO Alert™
USB 5 VDC 2.1A